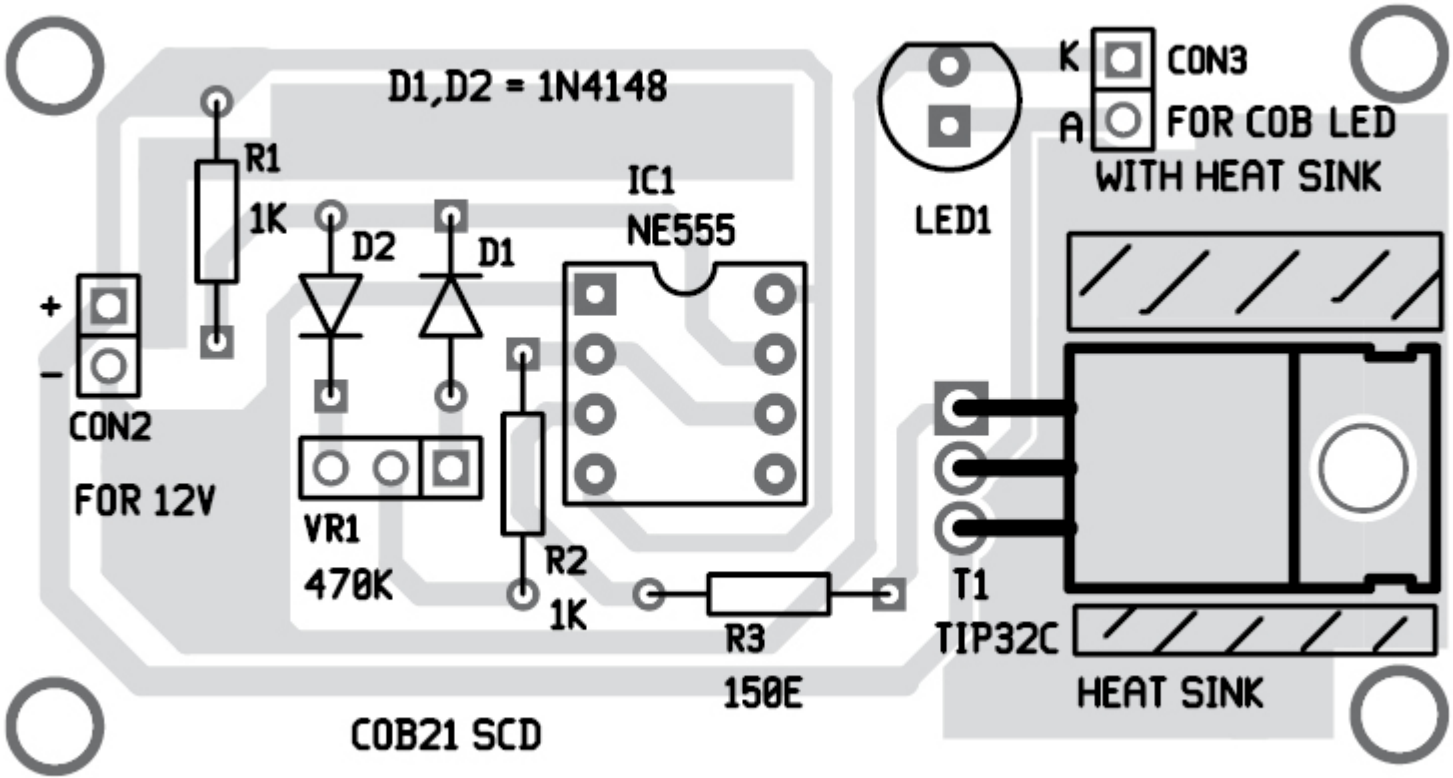
D1,D2 = 1N4148
R1
1K
D2
D1
IC1
NE555
LED1
K
A
CON3
FOR COB LED
WITH HEAT SINK
+
-
CON2
FOR 12V
VR1
470K
R2
1K
R3
150E
T1
TIP32C
HEAT SINK
COB21 SCD