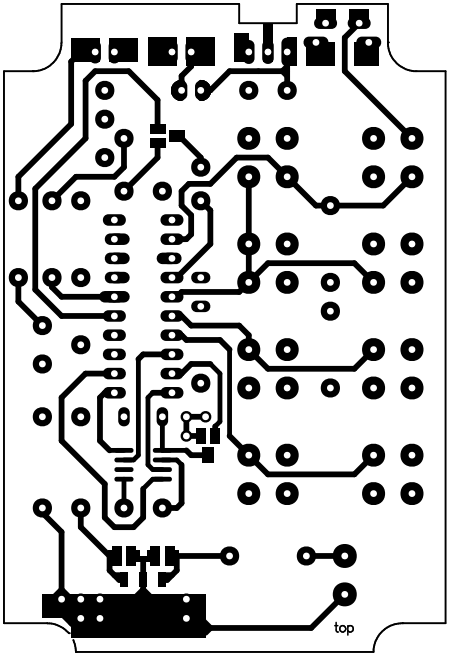
top

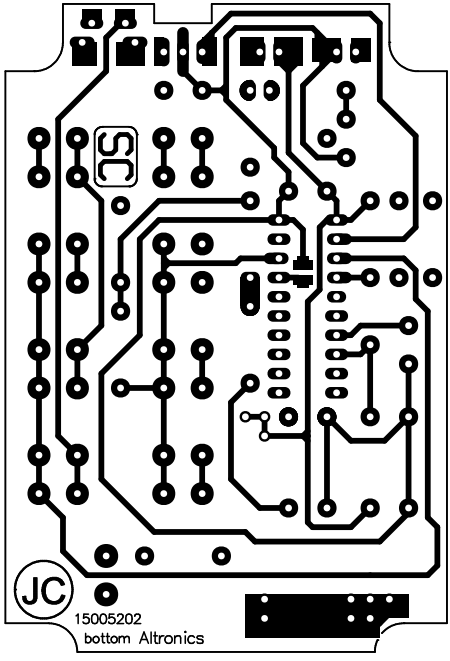
JC
15005202
bottom Altronics

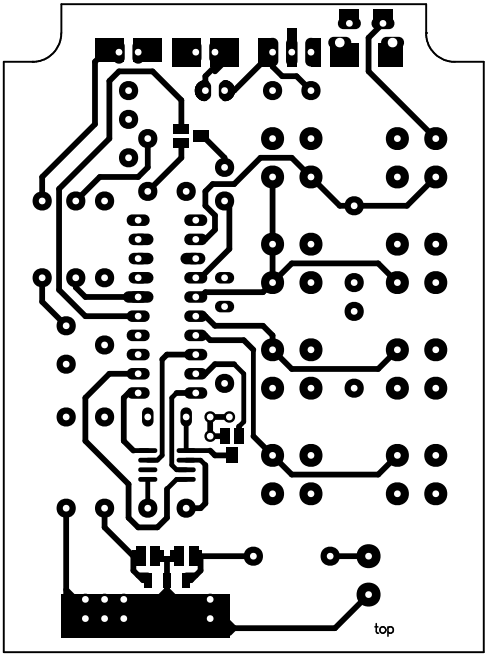
top

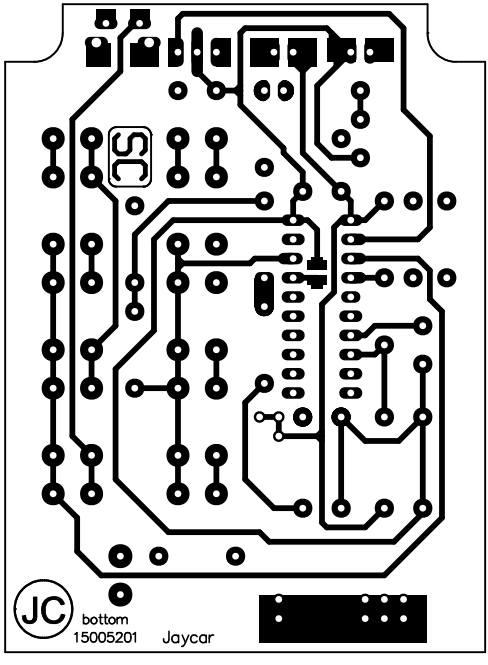
JC
bottom
15005201 Jaycar