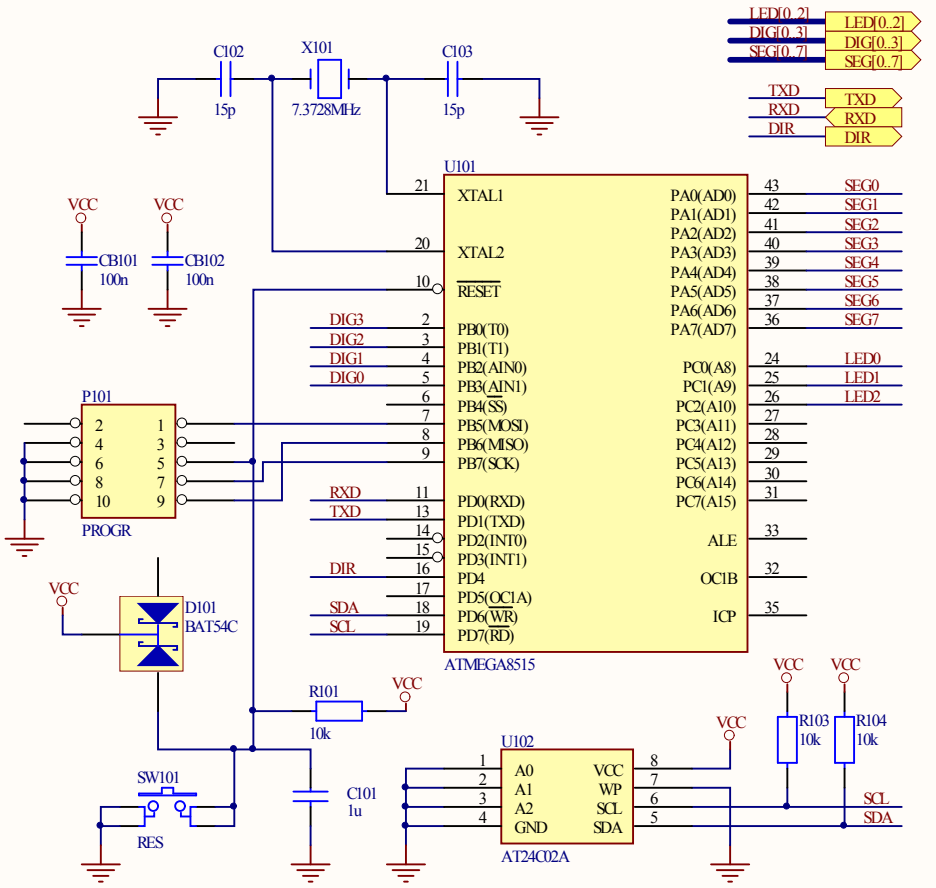

Title		
Size A4	Number	Revision
Date: 2019-12-17		Sheet of
File: E:\edw-eth\..\hc_scr1_1.SchDoc		Drawn By: